GAME NO. 642
MARCH, 1978

MIDWAY'S
EXTRA INNING
PARTS CATALOG

MIDWAY MFG. CO.
A BALLY COMPANY
10750 WEST GRAND AVENUE
FRANKLIN PARK, ILLINOIS 60131
U.S.A.

PHONE: (312) 451-1360 CABLE ADDRESS: MIDCO TELEX NO.: 72-1596

TABLE OF CONTENTS

	Page No.
GENERAL INSTRUCTIONS	1
SWITCH ADJUSTMENTS	2
NO. 642 — EXTRA INNING — PICTURE	3—5
HANDLE CONTROL ASSEMBLY	6—7
FLUORESCENT FIXTURE ASSEMBLY	8—9
FRONT DOOR ASSEMBLY	10—11
TRANSFORMER BOARD ASSEMBLY	12—13
ADDITIONAL PARTS LIST	14
GAME BOARD COMPONENTS LAYOUT	15
MOTHER BOARD COMPONENTS LAYOUT	16
POWER SUPPLY COMPONENTS LAYOUT	17
POWER SUPPLY SCHEMATIC	18
MONITOR SCHEMATIC — (MOTOROLA)	19
MONITOR SCHEMATIC — (WELLS-GARDNER)	20
WELLS-GARDNER REPLACEMENT PARTS LIST	21—22

WARNING

THIS GAME MUST BE GROUNDED. FAILURE TO DO SO MAY RESULT IN DESTRUCTION TO ELECTRONIC COMPONENTS.

GENERAL INSTRUCTIONS FOR "EXTRA INNING"

INSTALLATION

1. Remove shipping cleats located on the bottom of the cabinet.
2. Install 4provided leg levelers to bottom of cabinet and level cabinet.
3. The power is controlled by a switch located on top of the cabinet, (Upright Model) or on the bottom of the cabinet (Table Model). Plug into A.C. only 115 volts, 60 cycles. In low line areas (105 volts or less) a boost in the output voltage of the transformer may be obtained by removing the wire from the 115 volt tap of the tranformer and rewiring to the 105 volt position.

VOLTAGE CONTROL POTS:

Located on Power Supply Board (P.C. 0080-00904D) and are preset at the factory. These pots should not be tampered with unless the Distributor Service Department is contacted.

MUSIC (1Meg) AND AMPLIFIER (50K) ADJUSTMENT POTS:

Located on Game Logic Board. (P.D. A084-90700-A642) the 1 Meg Music Pot raises or lowers the volume of the background music. The 50K Amplifier Pot raised or lowers all other sounds (Cheer, Whistle, Bat Strike). See sketch below for pot locations.

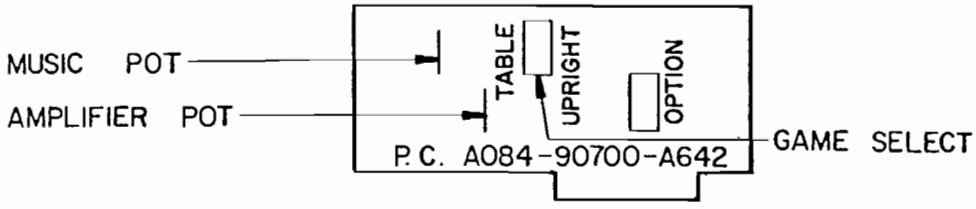

GAME SELECTION SWITCH: (Upright – Table Model)

Located on Game Logic Board. (P.C. A084-90700-A642). The Select Switch is provided to allow Logic Board flexibility. That is, the same board may be used by positioning all switches as indicated on sketch above.

COIN AND INNING OPTION SWITCH:

Located on Game Logic Board (P.C. A084-90700-A642) and may be adjusted as indicated on separate instructions in back-box area.

CAUTION: **Since the jacks on the cables of the Upright and Table Model are different, be sure to plug jacks as indicated below when servicing.**

METHOD OF PLAY ADJUSTMENT SWITCHES

	SW. #1	SW. #2	SW. #3
1 COIN PER INNING PLAYER MAY PLAY COMPUTER OR OPPONENT.	ON	ON	ON
2 COINS PER INNING PLAYER MAY PLAY COMPUTER OR OPPONENT.	ON	OFF	ON
1 COIN = 1 INNING, 2 COINS = 3 INNINGS PLAYER MAY PLAY COMPUTER OR OPPONENT.	OFF	ON	ON
2 COINS = 1 INNING, 4 COINS = 3 INNINGS PLAYER MAY PLAY COMPUTER OR OPPONENT.	OFF	OFF	ON
1 COIN = 1 INNING, 2 COINS = 3 INNINGS PLAYER PLAYS COMPUTER. 2 COINS = 1 INNING, 4 COINS = 3 INNINGS PLAYER MAY PLAY COMPUTER OR OPPONENT.	ON	ON	OFF
2 COINS = 1 INNING, 4 COINS = 3 INNINGS PLAYER PLAYS COMPUTER. 4 COINS = 1 INNING, 8 COINS = 3 INNINGS PLAYER MAY PLAY COMPUTER OR OPPONENT.	OFF	ON	OFF

EXTRA INNING

	SW. #4
HARD: IN THIS POSITION M-I-D-W-A-Y LETTERS MUST BE MADE ONE AT A TIME.	ON
EASY: IN THIS POSITION M-I-D-W-A-Y LETTERS MADE IN PAIRS — EXAMPLE: M-Y, I-A, D-W.	OFF

SPECIAL SELECT

	SW.#5
IN THIS POSITION ONLY A HOME RUN WILL WILL SCORE SPECIAL.	ON
IN THIS POSITION ANY HIT WILL SCORE SPECIAL.	OFF

TEST

	SW. #7
TEST RAM/ROD	ON
PLAY MODE	OFF

00642

NO. 642 – EXTRA INNING – PICTURE

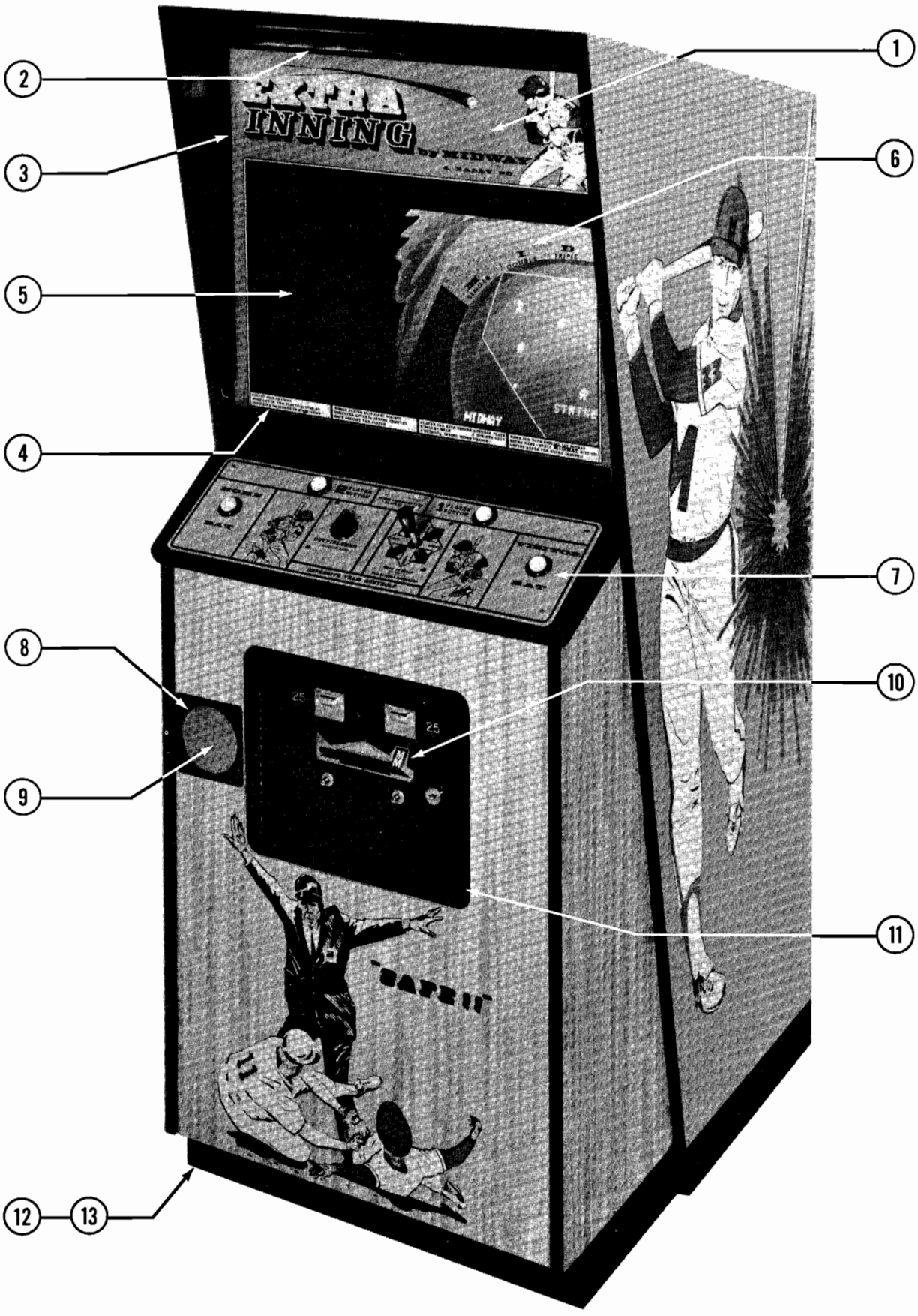

MIDWAY MFG. CO.
A BALLY COMPANY

NO. 642 – EXTRA INNING – PICTURE

ORDER BY PART NUMBER ONLY

ITEM	PART Nº	DESCRIPTION
1	0642-00900-01SC	DISPLAY PLEX - 24¾ x 21-11/16
2	0537-00903-1500	CYCOLAC GLASS EDGING - 24¼"
3	0537-00903-2900	CYCOLAC GLASS EDGING - 21-5/8" (2 REQ'D.)
4	0629-00902-0100	GLASS LIFT BRACKET - 24"
5	0605-00906-0000	MIRRORPANE MIRROR - 24¾ x 21-11/16
6	0619-00904-0000	VACUUM FORMED BALL FIELD
	0642-00903-0000	ADD-ON LABELS
7	A642-00008-0000	CONTROL SHELF ASSY.
	0642-00902-00SC	CONTROL (INSTRUCTION) PLATE
	0017-00101-0579	#6-32 x 1" CARRIAGE BOLTS (4 REQ'D.)
	0017-00101-0576	#6-32 x ¾ CARRIAGE BOLTS (4 REQ'D.)
	0017-00104-0027	#6 WASHER (8 REQ'D.)
	0017-00103-0005	#6-32 HEX NUT (8 REQ'D.)
8	0569-00001-00GR	SPEAKER BEZEL
9	0549-00128-0000	SPEAKER GRILL
	0017-00003-0161	SPEAKER
	0017-00041-0576	SPEAKER GASKET
	0017-00104-0022	#6 WASHER
	0017-00103-0005	#6-32 HEX NUT (8 REQ'D.)
10	A090-00020-00GR	DOUBLE ENTRY COIN DOOR ASSY.
11	0090-00002-02GR	DOOR FRAME
	0017-00101-0555	#6-32 x 5/16 HEX HD. BLK. S.M.S. (3 REQ'D.) (MOUNTS COIN DOOR TO FRAME)
12	0017-00102-0048	LEG LEVELERS (4 REQ'D.)
13	0017-00103-0026	LEG LEVELER NUTS (4 REQ'D.)
		NOT SHOWN LIST
	0017-00003-0189	23" MOTOROLA MONITOR (CHASSIS & TUBE COMPLETE)
	0017-00003-0198	CHASSIS
	0017-00003-0199	23" PICTURE TUBE
	0592-00104-0100	CHASSIS MTG. BRKT. – RIGHT HAND
	0592-00104-0200	CHASSIS MTG. BRKT. – LEFT HAND
	0017-00101-0639	#8-32 x 1¼ CARRIAGE BOLTS (4 REQ'D. – TUBE 4 REQ'D. – CHASSIS)
	0017-00104-0022	STEEL WASHER (4 REQ'D. – CHASSIS)

NO. 642 – EXTRA INNING – PICTURE

ORDER BY PART NUMBER ONLY

ITEM	PART Nº	DESCRIPTION
	0161-00100-0000	T.V. MTG. WASHER (4 REQ'D. – TUBE)
	0017-00103-0061	#8-32 S.E.M.S. HEX LOCK NUT (4 REQ'D. – TUBE, 4 REQ'D. – CHASSIS)
	0161-00002-0000	DAG SPRING ASSY.
	3000-17155-0000	GROUND STRAP
	0017-00009-0033	BASSICK CLAMP (2 REQ'D.)
	0080-00101-0000	FISH PAPER SHIELD
	0605-00908-0000	CARDBOARD TUBE MASK
	0605-00108-0000	GLASS LOCK EXT. (2 REQ'D.)
	0605-00104-0100	GLASS LOCK BRKTS. (2 REQ'D.)
	0017-00101-0028	#8 x ¾ BLK. HEX HD. WD. SCR. (4 REQ'D.)
	A642-00001-0000	DISPLAY INSERT
	0017-00031-0002	LAMP SOCKETS (3 REQ'D.)
	0017-00003-0052	LAMPS (3 REQ'D.)

NO. 642 – EXTRA INNING – HANDLE CONTROL ASSY.

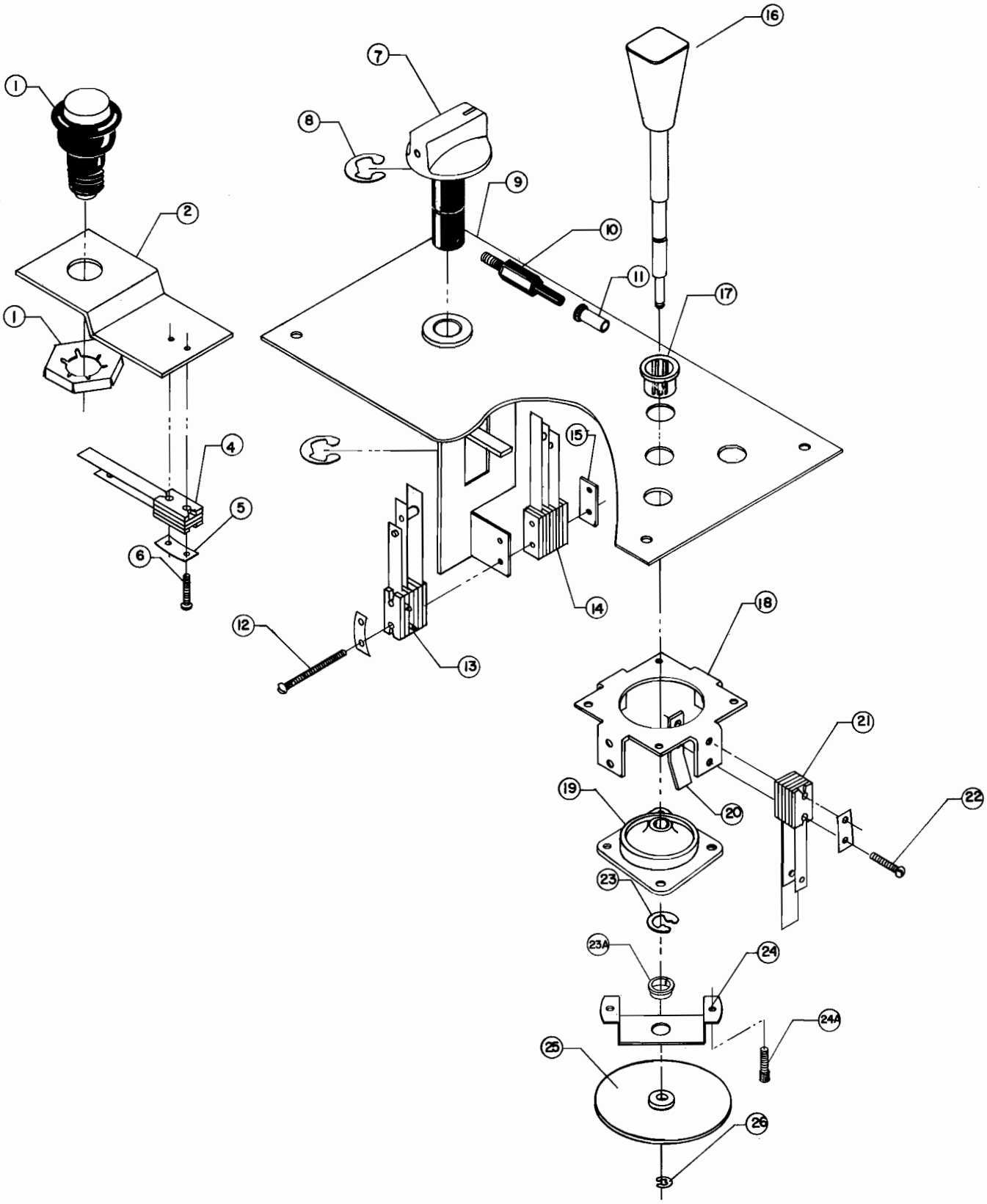

NO. 642 – EXTRA INNING – HANDLE CONTROL ASSY.

ORDER BY PART NUMBER ONLY

ITEM	PART Nº	DESCRIPTION
1	0612-00006-0000	PUSH BUTTON ASSY. (4)
2	0586-00107-0000	BUTTON HOLDER BRACKET (4)
4	0586-00036-0000	BUTTON SWITCH (4)
5	0020-00202-0000	BUTTON SWITCH PLATE (4)
6	0017-00101-0521	5 - 40 x 3/8 P.H. M.S. (8)
7	0605-00002-0000	KNOB & SHAFT ASSY.
8	0017-00100-0050	E-RING
9	0619-00002-0000	MTG. BRACKET ASSY.
10	0589-00700-0000	PIN
11	0577-00703-0000	SLEEVING
12	0017-00101-0534	5 - 40 x 1-3/8 R.H. M.S. (4)
13	0605-00006-0000	LEFT OUTFIELD SWITCH
14	0605-00005-0000	RIGHT OUTFIELD SWITCH
15	0520-00138-0000	SWITCH PLATE
16	0615-00005-0000	HANDLE ASSY.
17	0017-00042-0159	SNAP BUSHING
18	0612-00104-0000	MTG. SWITCH BRACKET
19	0017-00009-0220	GROMMET
20	0597-00113-0000	GUARD STRIP (4)
21	0597-00004-0000	CONTROL SWITCH (4)
22	0017-00101-0527	5 - 40 x 5/8 P.H. M.S. (8)
23	0017-00100-0025	E-RING
23a	0017-00042-0075	NYLINER
24	0612-00102-0000	STOP BRACKET BOTTOM (4)
24a	0017-00101-0313	#8 - 32 x 3/8 LNG. SOCKET CAP SCREW
25	0605-00004-0000	WASHER & BUSHING SUB ASSY.
26	0017-00100-0015	E-RING
	0619-00001-0000	PITCHER & OUTFIELD ASSY. COMPLETE

NO. 642 – EXTRA INNING – FLUORESCENT FIXTURE ASSY.

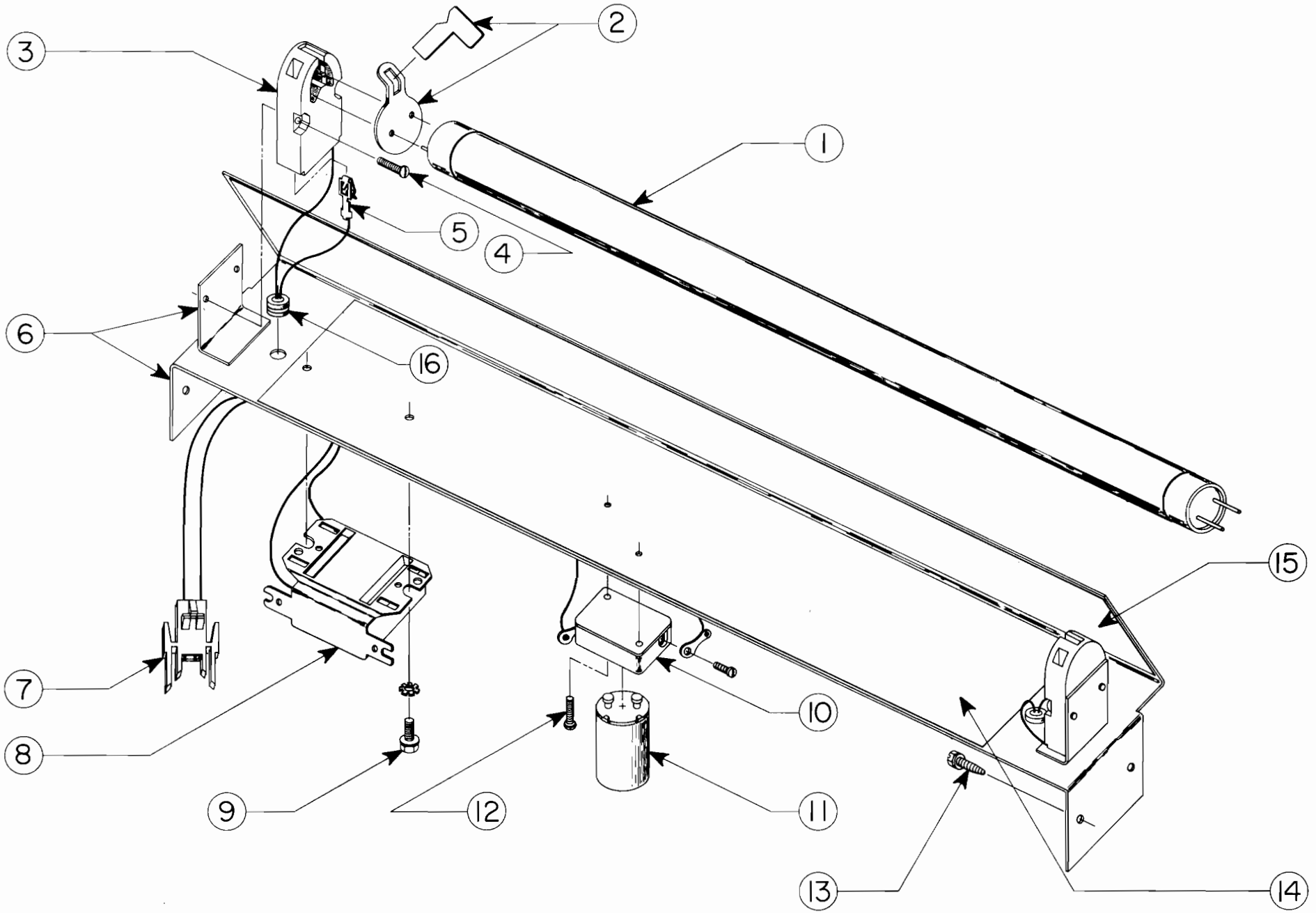

MIDWAY MFG. CO.
A BALLY COMPANY

NO. 642 – EXTRA INNING – FLUORESCENT FIXTURE ASSY.

ORDER BY PART NUMBER ONLY

ITEM	PART Nº	DESCRIPTION
1	0017-00003-0110	24" FLUORESCENT LAMP
2	0017-00021-0005	FLUORESCENT LOCKS (2 REQ'D.)
3	0017-00031-0015	LAMP HOLDERS (2 REQ'D.)
4	0017-00101-0521	#5-40 x 3/8 BINDER HD. M.S. (4 REQ'D.)
5	0017-00021-0078	BRASS FLUORESCENT TERM
6	0605-00007-0000	FLUORESCENT BRACKET ASSY.
7	0017-00021-0096	2 TERMINAL JACK – FEMALE
8	0017-00003-0026	BALLAST
9	0017-00101-0593	#8-32 x 1/4 PAN HD. EXT. S.M.S. (2 REQ'D.)
10	0017-00021-0079	STARTER HOLDER
11	0017-00003-0019	STARTER
12	0017-00101-0528	#5-40 x 3/4 R.H. M.S. (2 REQ'D.)
13	0017-00101-0017	#6 x 1/2 HEX. HD. W/W BLK. S.M.S. (4 REQ'D.)
14	0605-00910-0100	REFLECTOR STRIP - 21-1/4" LONG
15	0605-00910-0200	REFLECTOR STRIP - 24-1/2" LONG
16	0017-00041-0013	GROMMETS (2 REQ'D.)
	0605-00010-0000	FLUORESCENT ASSY. - COMPLETE

NO. 642 – EXTRA INNING – FRONT DOOR ASSY.

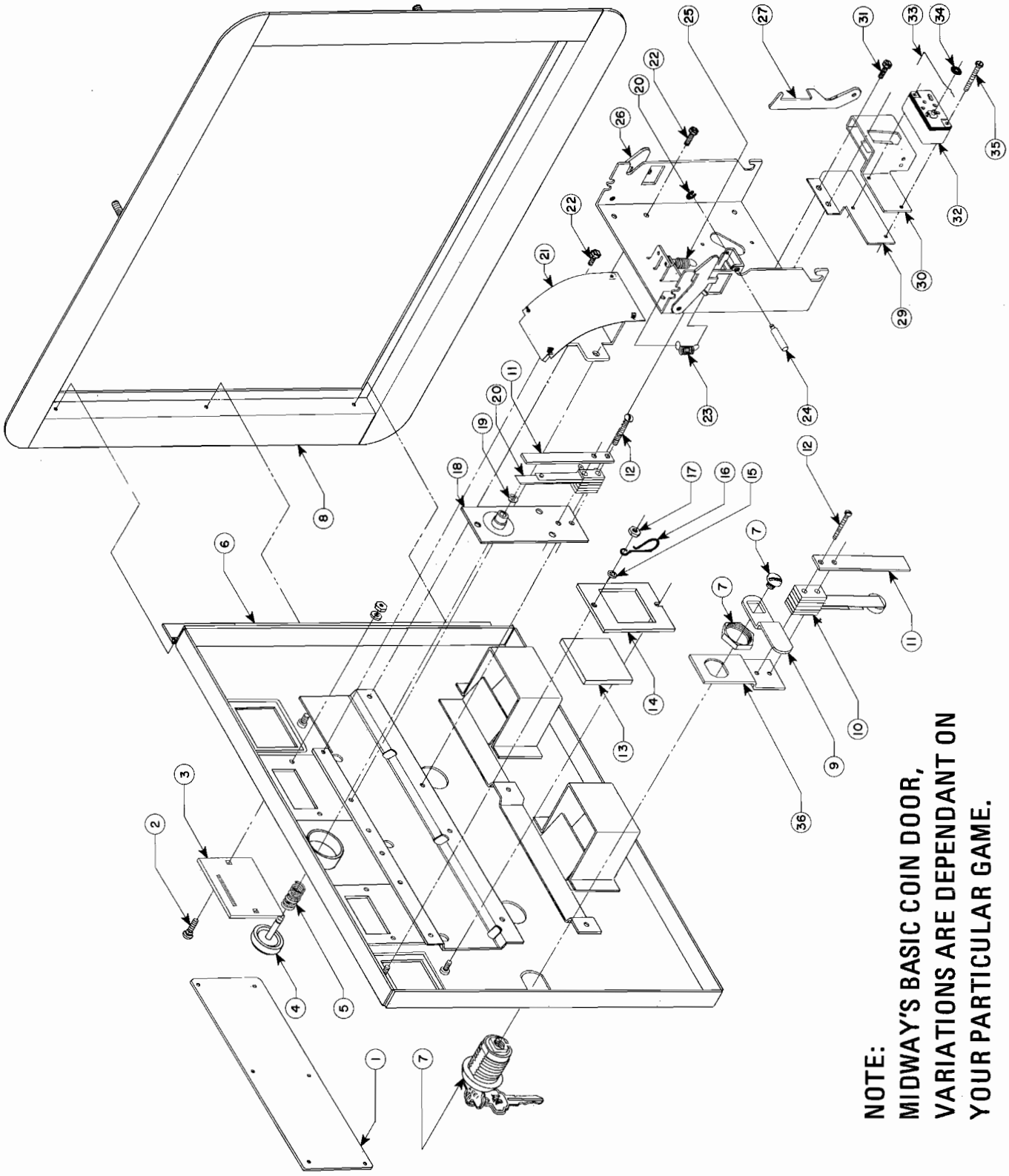

NOTE:
MIDWAY'S BASIC COIN DOOR,
VARIATIONS ARE DEPENDANT ON
YOUR PARTICULAR GAME.

NO. 642 – EXTRA INNING – FRONT DOOR ASSY.

ORDER BY PART NUMBER ONLY

ITEM	PART Nº	DESCRIPTION
1	0090-00902-0000	DRESS PLATE
	0090-00902-0100	DRESS PLATE (W/O PRESS BUTTON TO START GAME)
2	0017-00101-0552	6-32 x 1/4 CARRIAGE BOLT (2)
3	0090-00117-0003	COIN ENTRY PLATE (25¢)
4	0090-00906-0000	PLASTIC START BUTTON
5	0010-00007-0000	COMPRESSION SPRING
6	0090-00013-0200	DOOR ASSY. DOUBLE ENTRY
7	0017-00005-0050	DOOR LOCK & KEY WITH SCREW & NUT
8	0090-00002-02BR	DOUBLE DOOR FRAME
9	0017-00005-0041	421 N.S. CAM
10	0090-00901-0000	DOOR SWITCH
11	0090-00126-01ZN	SWITCH BACKUP PLATE
12	0017-00101-0528	5-40 x 3/4" LNG. M.S.
13	0090-00903-0040	25¢ WINDOW
14	0090-00143-0000	COIN PLEX RETAINER
15	0017-00104-0002	SPLIT LOCK WASHER
16	0017-00007-0019	KEY HOOK
17	0017-00103-0005	6-32 HEX NUT
18	0090-00010-0000	SW. PLATE & OILLITE ASSY.
19	0017-00100-0018	"E" RING
20	0090-00131-0000	SWITCH
21	0090-00104-0000	TOP & BTM. COIN CHUTE W/BRKT. ASSY.
22	0017-00101-0598	8-32 x 5/16 SCREW
23	0010-00181-0100	SPRING
24	0090-00129-0000	PIVOT POST
25	0010-00134-0000	SPRING
26	0090-00008-0000	ACCEPTOR FRAME ASSY.
27	0093-00155-0000	REJECTOR LEVER
28	0017-00100-0012	"E" RING
29	0093-00151-0000	COIN GUIDE MTG. BRACKET
30	0090-00005-0000	COIN GUIDE ASSY.
31	0017-00101-0555	6-32 x 5/16 SCREW
32	0017-00005-0039	COIN SWITCH
33	0010-00557-0025	TRIP WIRE
34	0017-00007-0132	PUSH-ON RING (BIK)
35	0017-00101-0507	#4-36 x 3/4 SCREW
36	0090-00128-0000	SWITCH BRKT. – DOOR TILT

NO. 642 – EXTRA INNING – TRANSFORMER BOARD ASSY.

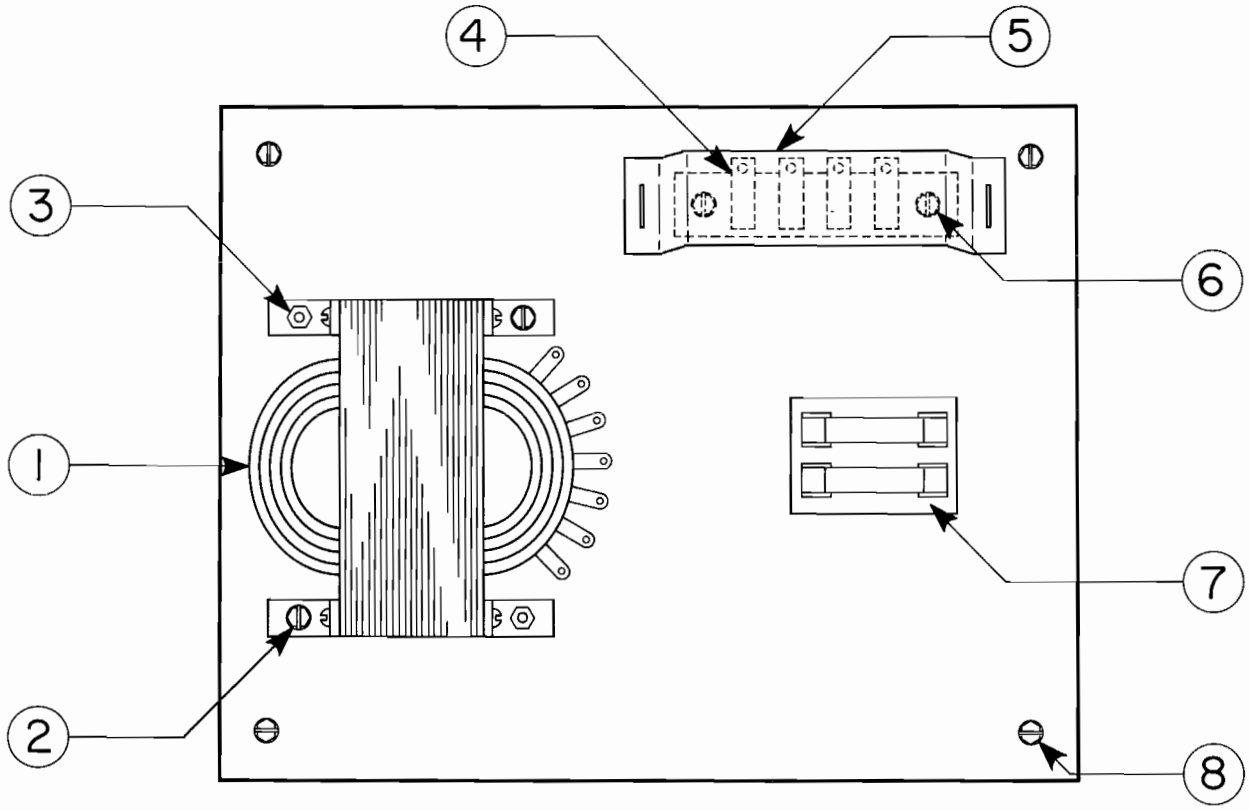

NO. 642 – EXTRA INNING – TRANSFORMER BOARD ASSY.

ORDER BY PART NUMBER ONLY

ITEM	PART Nº	DESCRIPTION
1	MT00-00063-0000	TRANSFORMER - 60 CYCLE OR
	MT00-00064-0000	TRANSFORMER - 50 CYCLE - FOREIGN
2	0017-00101-0025	#8 x 1/2 SLOT HEX HD. S.M.S. (2 REQ'D.)
3	0017-00101-0692	#8 - 32 x 7/8 CARRIAGE BOLTS (2 REQ'D.)
	0017-00103-0008	#8 - 32 HEX NUT (2 REQ'D.)
4	0031-00001-0000	TERMINAL STRIP ASSY.
5	0618-00122-0000	FISHPAPER SHIELD
6	0017-00101-0017	#6 x 1/2 HEX. HD. S.M.S. (6 REQ'D.)
7	0720-00001-0000	FUSE BLOCK ASSY. (2 POSITION)
8	0017-00101-0030	#8 x 1" HEX HD. WOOD SCREW (4 REQ'D.)
	A642-00100-0000	TRANSFORMER BOARD ASSY. – COMPLETE

NO. 642 – EXTRA INNING – ADDITIONAL PARTS LIST

ORDER BY PART NUMBER ONLY

ITEM	PART №	DESCRIPTION
	A642-00005-0000	LOWER BACK DOOR W/LOCK ASSY.
	A642-00003-0000	UPPER BACK DOOR W/LOCK ASSY.
	A097-00001-0000	LOCK ASSY (1 UPPER, 1 LOWER)
	A623-00110-0000	COIN BOX ASSY.
	A623-00013-0000	COIN BOX COVER ASSY.
	A624-00001-0000	COIN BOX GUIDE BRKT. ASSY.
	0624-00101-0000	COIN BOX GUIDE BRKT.
	0017-00101-0628	#8-32 x 3/4 CARRIAGE BOLTS (4 REQ'D.)
	0017-00104-0022	#8 STEEL WASHER (4 REQ'D.)
	0017-00103-0008	#8-32 HEX NUT (4 REQ'D.)
	0017-00003-0102	COIN METER (MOUNTS ON COIN DOOR)
	0017-00009-0009	TURN BUTTON (2 REQ'D.)
	0017-00101-0028	#8 x 3/4 HEX HD. WOOD SCR. (2 REQ'D.)
	0605-00107-0000	FISHPAPER BARRIER
	0603-00131-0000	STRIKE (2 REQ'D.)
	0567-00106-0100	SWITCH MTG. PLATE
	0586-00036-0000	ON-OFF SWITCH
	A642-00009-0000	MOTHER & GAME BOARD ASSY.
	A084-90000-H642	MOTHER BOARD ASSY.
	A084-90700-A642	GAME BOARD ASSY.
	A082-90400-E000	POWER SUPPLY ASSY.
	A642-00100-0000	TRANSFORMER BOARD ASSY.
	0597-00012-0100	P.C. SUPPORT BRKT. ASSY – RIGHT HAND
	0597-00012-0200	P.C. SUPPORT BRKT. ASSY – LEFT HAND
	0624-00902-0100	P.C. SUPPORT BRKT. – 12" (4 REQ'D.)
	0624-00902-0300	P.C. SUPPORT BRKT. –2-1/2" (4 REQ'D.)
	0017-00101-0025	#8 x 1/2 HEX HD. WD. SCREW (16 REQ'D.) FOR ALL P.C. SUPPORT BRKTS.
	0017-00009-0419	PIN EXTRACTOR TOOL (PIN POPPER)

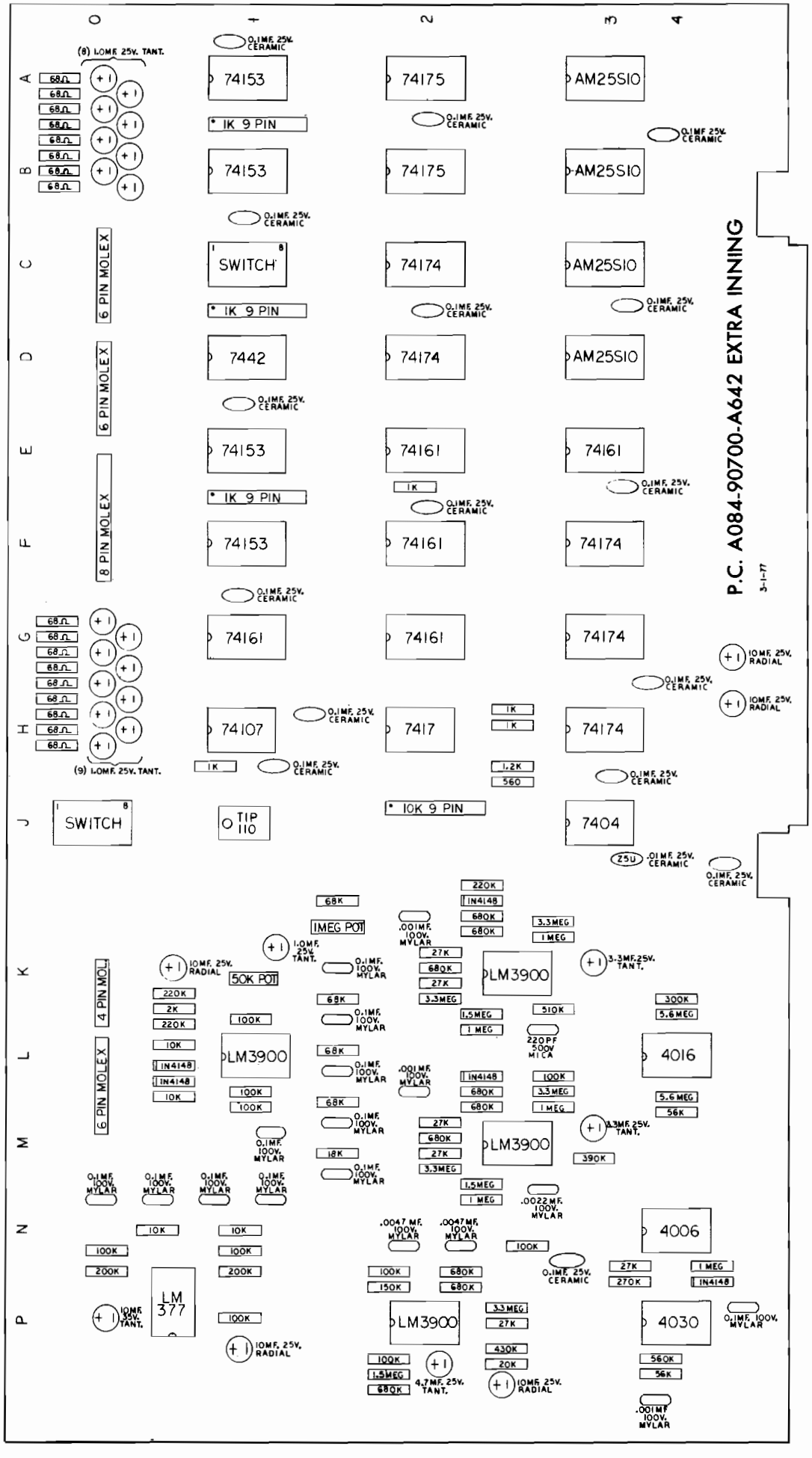
P.C. A084-90700-A642 EXTRA INNING
3-1-77
(8) 1.0MF. 25V. TANT.
(9) 1.0MF. 25V. TANT.
74153
74175
AM25S10
IK 9 PIN
SWITCH
74174
7442
74161
74107
7417
74174
10K 9 PIN
7404
TIP 110
SWITCH
6 PIN MOLEX
8 PIN MOLEX
4 PIN MOL.
IMEG POT
50K POT
LM3900
4016
4006
4030
LM 377
0.1MF. 25V. CERAMIC
10MF. 25V. RADIAL
.01MF. 25V. CERAMIC
0.1MF. 100V. MYLAR
.001MF. 100V. MYLAR
1.0MF. 25V. TANT.
3.3MF. 25V. TANT.
4.3MF. 25V. TANT.
4.7MF. 25V. TANT.
10MF. 35V. TANT.
220PF 500V MICA
.0022MF. 100V. MYLAR
.0047MF. 100V. MYLAR

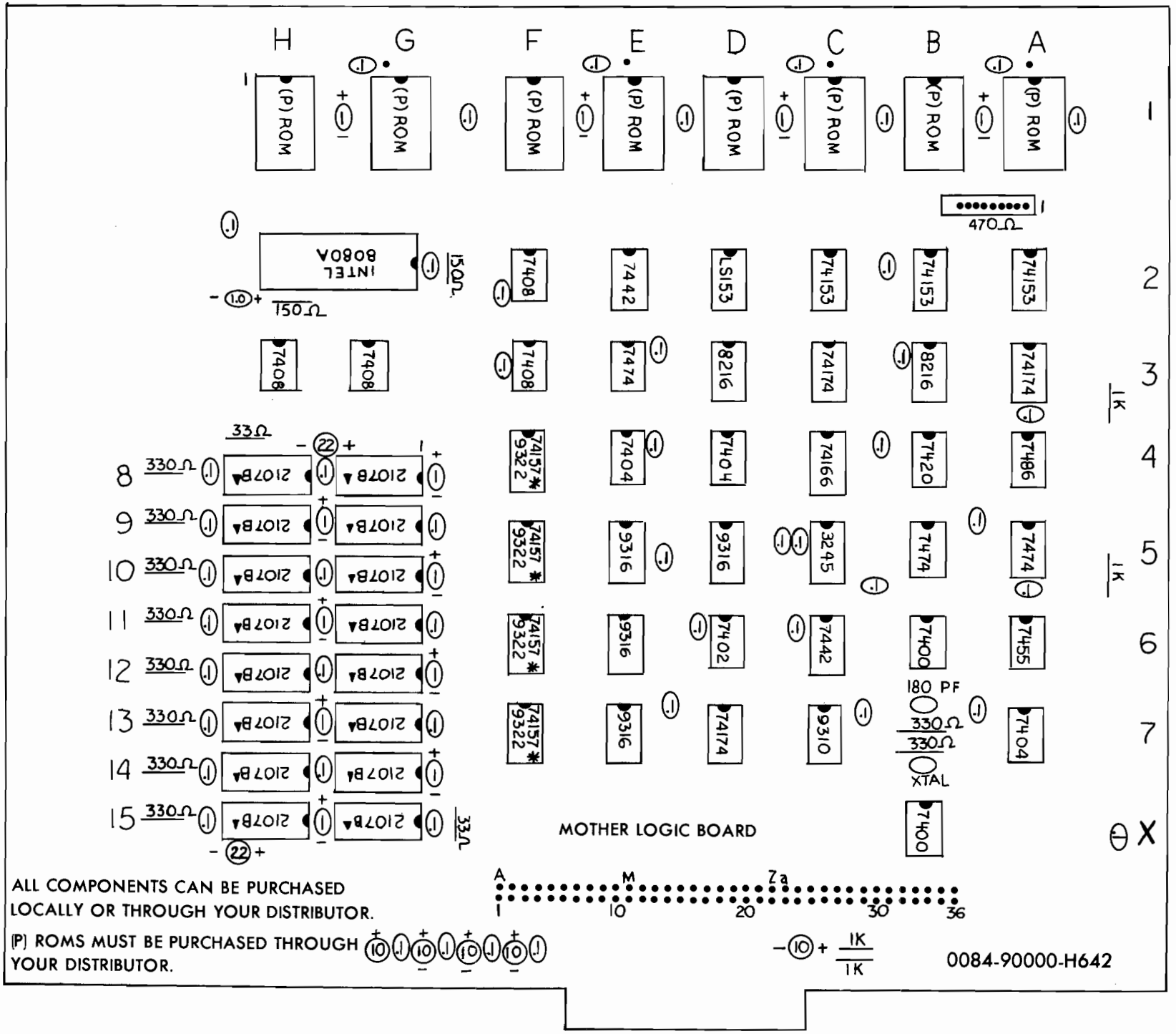
H G F E D C B A
1 2 3 4 5 6 7 X
(P) ROM
470Ω
INTEL 8080A
150Ω
7408
7442
LS153
74153
74174
8216
7486
7420
7474
7455
7404
7400
74157* 9322
9316
9310
3245
74166
74402
2107B
330Ω
33Ω
1K
180 PF
XTAL
MOTHER LOGIC BOARD
A M Za
1 10 20 30 36
ALL COMPONENTS CAN BE PURCHASED LOCALLY OR THROUGH YOUR DISTRIBUTOR.
(P) ROMS MUST BE PURCHASED THROUGH YOUR DISTRIBUTOR.
0084-90000-H642

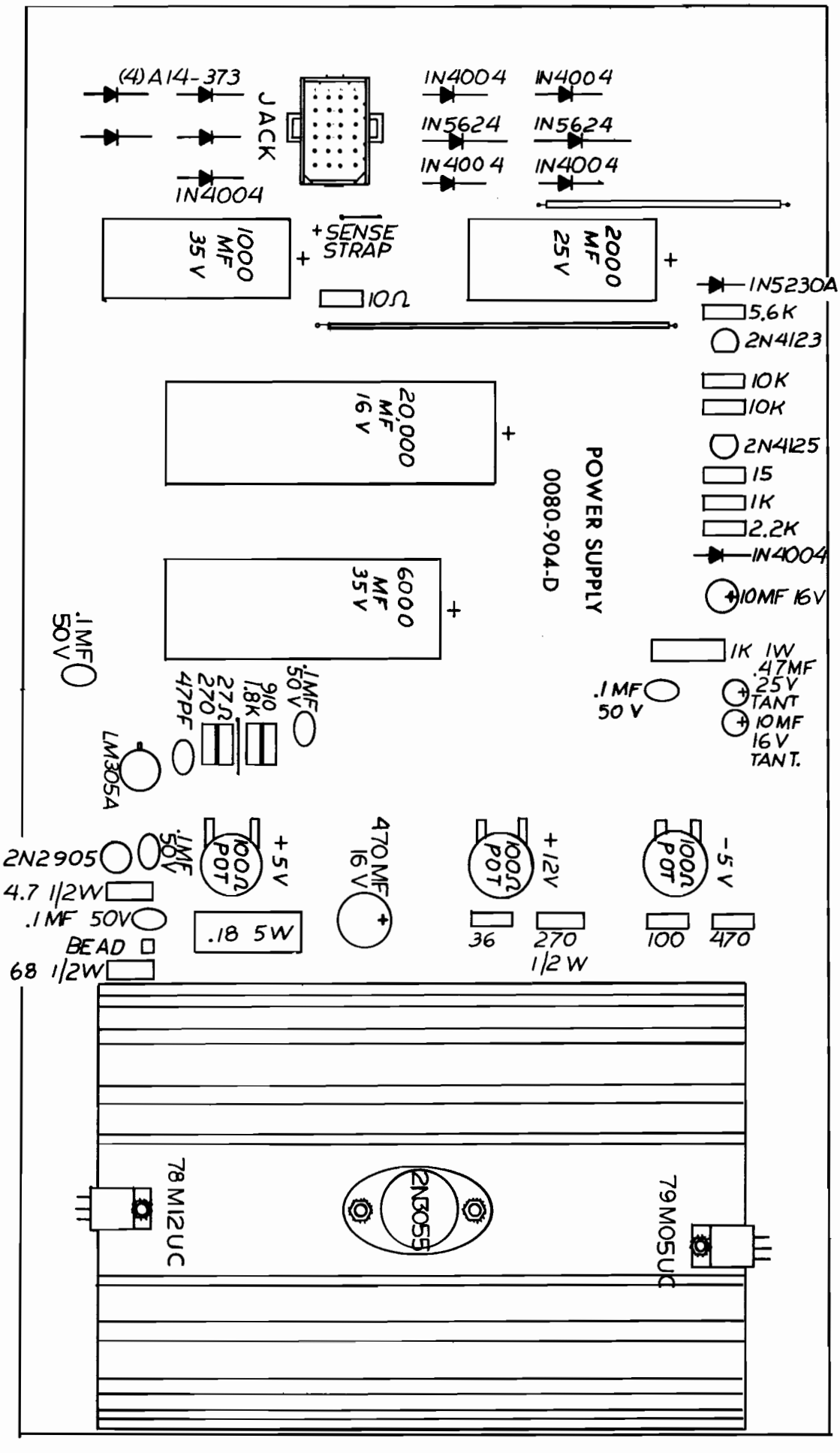
(4) A14-373
JACK
IN4004
IN4004
IN5624
IN5624
IN4004
IN4004
IN4004
1000 MF 35 V
+ SENSE STRAP
10Ω
2000 MF 25 V
IN5230A
5.6K
2N4123
10K
10K
2N4125
15
1K
2.2K
IN4004
10MF 16V
20,000 MF 16 V
POWER SUPPLY
0080-904-D
6000 MF 35 V
.1MF 50V
1K 1W
.47MF 25V TANT
.1 MF 50 V
10MF 16V TANT.
.1MF 50V
910 1.8K
27Ω 270
47PF
LM305A
2N2905
.1MF 50V
100Ω POT
+5V
470 MF 16 V
100Ω POT
+12V
100Ω POT
-5V
4.7 1/2W
.1MF 50V
BEAD
68 1/2W
.18 5W
36
270 1/2 W
100
470
78M12UC
2N3055
79M05UC

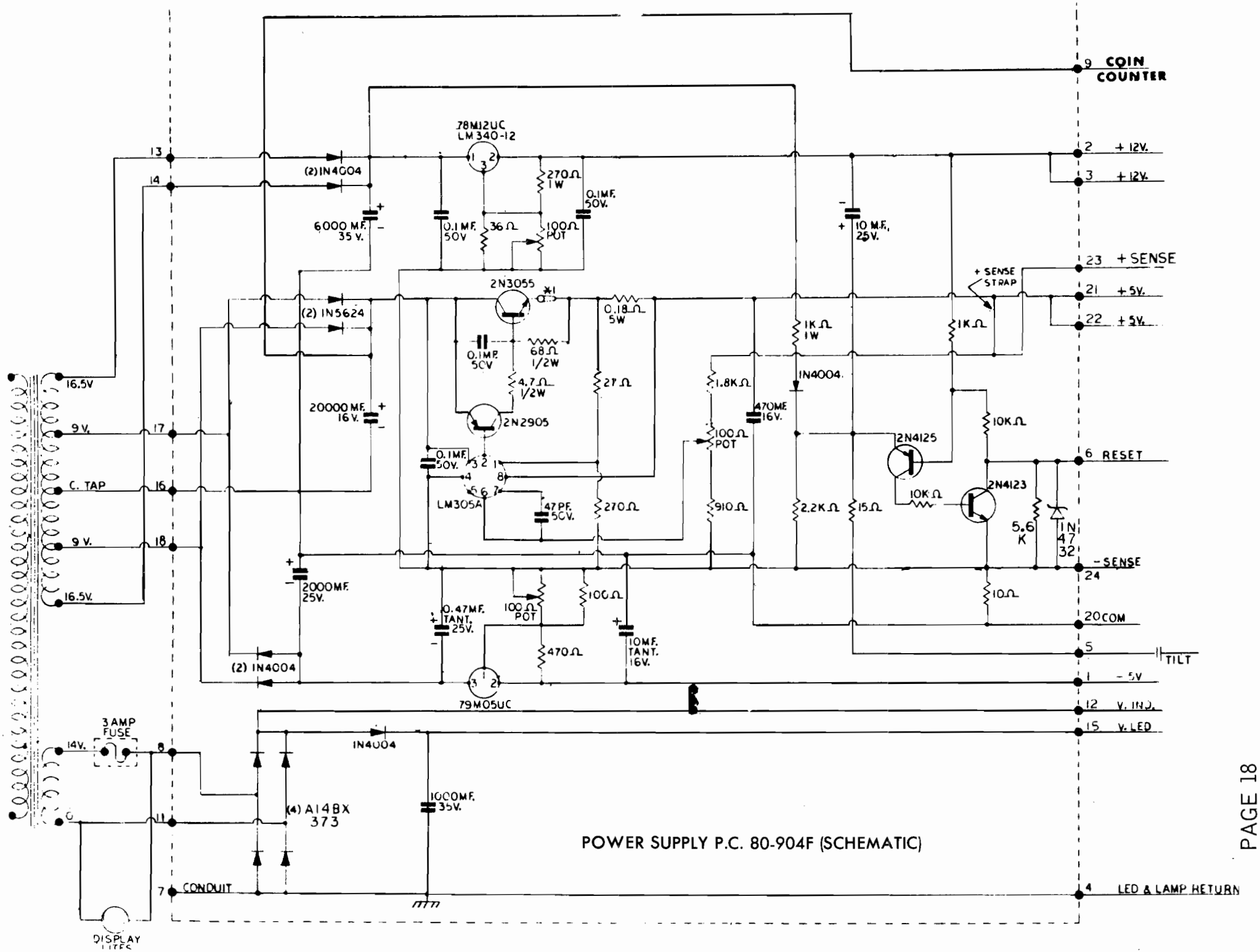
9 COIN COUNTER
2 + 12V.
3 + 12V.
23 + SENSE
21 + 5V.
22 + 5V.
6 RESET
24 - SENSE
20 COM
5 TILT
1 - 5V
12 V. IND.
15 V. LED
4 LED & LAMP RETURN
78M12UC
LM340-12
(2) IN4004
6000 MF. 35 V.
0.1 MF. 50V
36 Ω
270 Ω 1W
100 Ω POT
0.1 MF. 50V.
10 MF. 25V.
+ SENSE STRAP
2N3055
(2) IN5624
0.18 Ω 5W
0.1 MF. 50V
68 Ω 1/2W
4.7 Ω 1/2W
27 Ω
1K Ω 1W
1K Ω
1N4004
1.8K Ω
470 MF. 16V.
100 Ω POT
2N2905
20000 MF. 16V.
0.1 MF. 50V.
LM305A
47 PF. 50V.
270 Ω
910 Ω
2.2K Ω
15 Ω
2N4125
10K Ω
10K Ω
2N4123
5.6 K
1N 4732
2000 MF. 25V.
0.47 MF. TANT. 25V.
100 Ω POT
100 Ω
470 Ω
10 MF. TANT. 16V.
10 Ω
(2) IN4004
79M05UC
16.5V
9 V.
C. TAP
9 V.
16.5V.
3 AMP FUSE
14V.
IN4004
(4) A14BX 373
1000 MF. 35V.
CONDUIT
DISPLAY LITES
POWER SUPPLY P.C. 80-904F (SCHEMATIC)

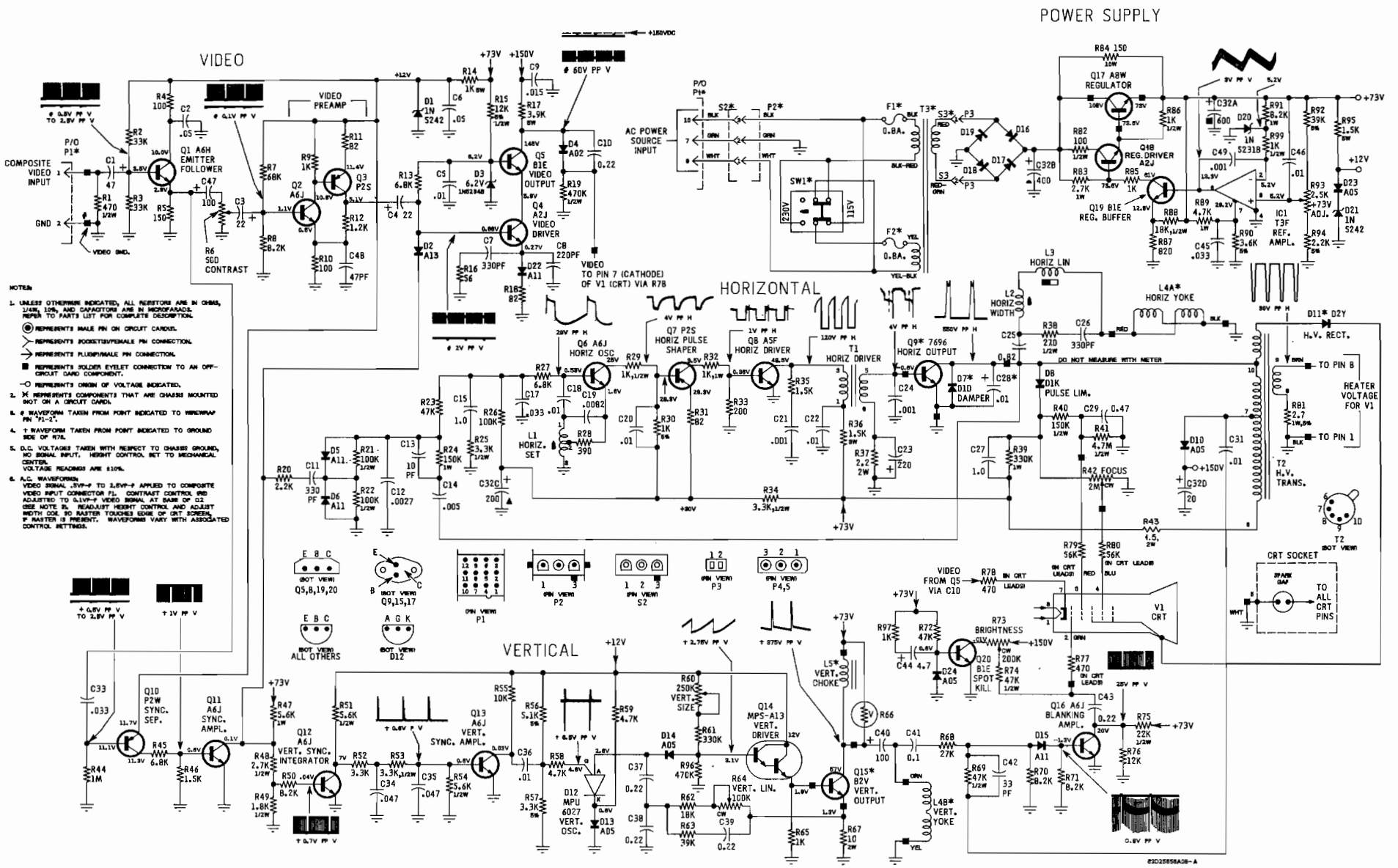

M5000–155, M7000–155 – Diagram Schematic

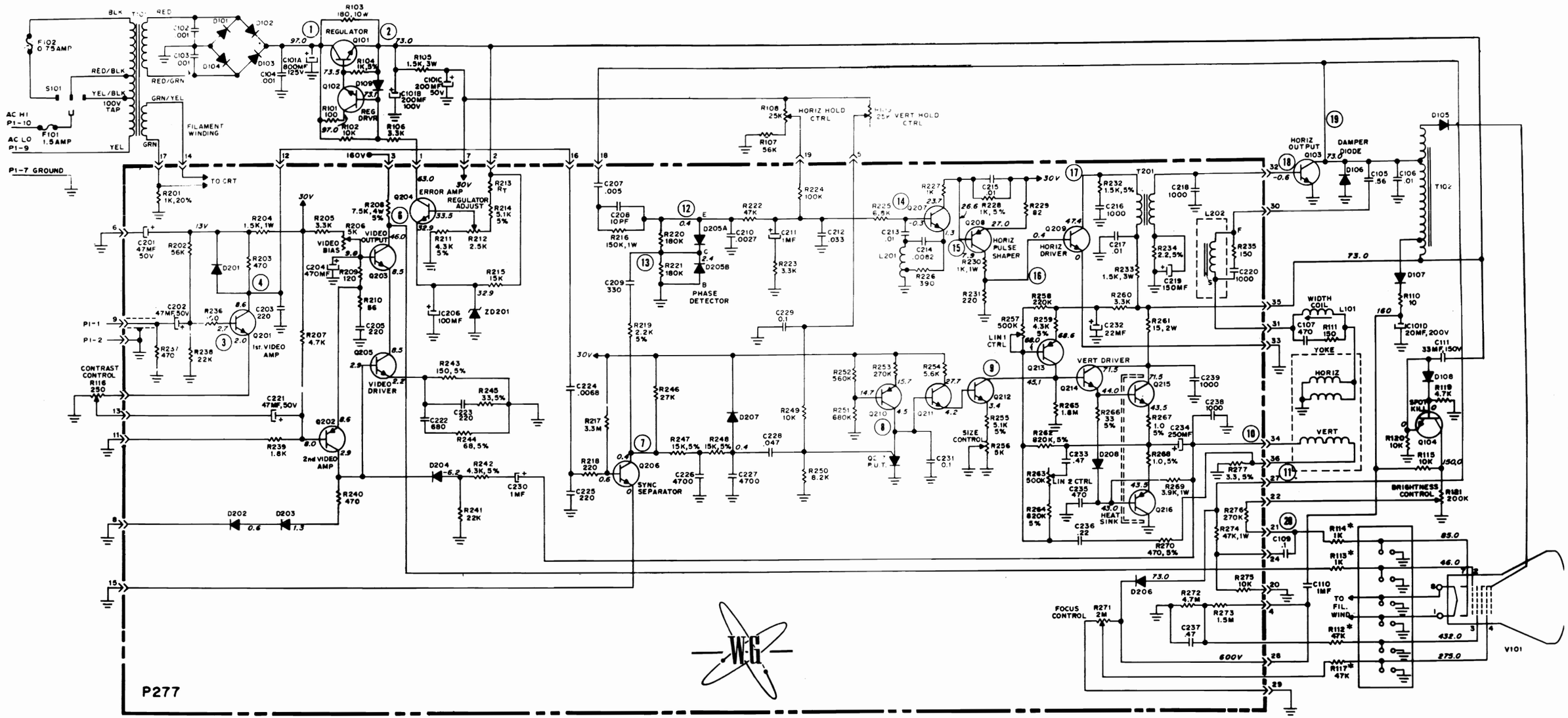

NOTES:

1. VOLTAGE MAY VARY WITH CONTROL SETTING.
2. LINE VOLTAGE MAINTAINED AT 120VAC, 50/60Hz.
3. ALL D.C. VOLTAGES ±10% MEASURED FROM POINT INDICATED TO CHASSIS USING HIGH IMPEDANCE METER WITH NO SIGNAL INPUT. CONTRAST AND BRIGHTNESS CONTROLS AT MAXIMUM; ALL OTHER CONTROLS IN NORMAL OPERATING POSITION.
4. ◯ -WITH INTERNAL NUMBER INDICATES LOCATION OF WAVE FORM READING.

WELLS-GARDNER ELECTRONICS

CORPORATION

2701 N. KILDARE AVE. • CHICAGO, ILL. 60639 • ALBANY 2-8220

TELEX 25-3286

NOTES:

* INDICATES RESISTORS LOCATED IN PICTURE TUBE LEAD ASSEMBLY.

RESISTANCE VALUES IN OHMS, 1/2 WATT, 10% UNLESS OTHERWISE NOTED. K=1,000 M=1,000,000

CAPACITANCE VALUES OF 1 OR LESS ARE IN MICROFARADS. ABOVE 1 IN PICOFARADS UNLESS OTHERWISE NOTED.

MODEL NO.
V1001-5734

REPLACEMENT PARTS LIST

CHASSIS PARTS

CAPACITORS

C101A, B, C, D	45X0558-001	800 μF/125V, 200 μF/100V 200 μF/50V, 20 μF/200V Electrolytic
C102, 103 104	80X0001-000	.001 μF, GMV Z5U Cer. Disc.
★C105	342X5642-049	.56 μF, 400V, 10% Polypropylene
★C106	46X0536-001	.01 μF, 1200V, 5% Polypropylene
C107	80X0099-006	470 pF, Z5F, 10%
C109	342X1044-040	0.1 μF, 400V, 20% Mylar
★C110	46X0540-002	1.0 μF, 630V, 10% Polyester Film
C111	45X0515-032	33 μF, 150V, Electrolytic

CONTROLS

R108, 109	40X0585-091	25k Ohm, Horiz. & Vert. Hold
R116	40X0585-090	250 Ohm, Contrast
R121	40X0585-092	200k Ohm, Brightness

COILS & TRANSFORMERS

★L101	9A2787-001	Coil, Width
★T101	53X0475-001	Transformer, Power
★T102	53X0474-001	Transformer, Flyback

RESISTORS

R101	340X3101-941	100 Ohm, 10%, 1/2W
R102, 115, 120	340X3103-941	10k Ohm, 10%, 1/2W
★R103	340X0181-341	180 Ohm, 10%, 10W, WW
R104	340X3102-931	1k Ohm, 5%, 1/2W
★R105	340X6152-341	1.5k Ohm, 10%, 3W, WW
R106	340X3332-941	3.3k Ohm, 10%, 1/2W
R107	340X3563-941	56k Ohm, 10%, 1/2W
R110	340X3100-941	10 Ohm, 10%, 1/2W
R111	340X3151-941	150 Ohm, 10%, 1/2W
R119	340X3472-941	4.7k Ohm, 10%, 1/2W

SEMICONDUCTORS

D101, 102 103, 104	66X0023-009	Rectifier, Silicon 500V 1N444B
★D105	66X0067-001	Rectifier Varo H1802
★D106	66X0068-001	Diode, Damper MR1-1600
D107	66X0053-001	Diode, 350V Amperex BA148
D108, 109	66X0046-001	Diode, Silicon FDH444
★Q101	86X0117-001	Transistor (NPN) 2N5632 Regulator
Q102	86X0071-001	Transistor (NPN) Reg. Driver MPSA06
★Q103	86X0118-001	Transistor (NPN) BU207 Hor. Output
Q104	86X0065-001	Transistor (NPN) D40N5 Spot Kill

MISCELLANEOUS

	16X0171-001	Fuse Holder
★F101	16X0176-001	Fuse, 1.5 Amp. Slo-Blo 3AG
★F102	16X0175-001	Fuse, 0.75 Amp, Slo-Blo 3AG
★	13X1201-001	HV Lead & Recept. Assy.
	28X0789-001	Spring, Dag, Grounding
★	9A2786-001	Deflection Yoke & Clamp
★V101 or ★V101	19VARP4 or 22VATP4	CRT (19V1001) CRT (22V1001)

★ Product Safety Device

REPLACEMENT PARTS LIST
P277 CIRCUIT BOARD ASSY.

CAPACITORS

C201, 202, 221	45X0524-027	47 μF, 50V, Electrolytic
C203, 205, 223, 225	80X0099-057	220 pF, 10%, Z5F, Cer. Disc.
C204	45X0524-053	470 μF, 16V, Electrolytic
C206	45X0524-051	100 μF, 50V, Electrolytic
C207	80X0099-192	.005 μF, 20%, 1KV, Cer. Disc.
C208	80X0099-036	10 pF, 10%, 500V, Cer. Disc.
C209	80X0099-013	330 pF, 10%, 500V, Cer. Disc.
C210	349X4722-109	.0027 μF, 10%, Mylar
C211	45X0524-023	1.0 μF, 15V, Electrolytic
C212	349X3332-109	.033 μF, Mylar
C213	46X0537-002	.01 μF, Poly
C214	46X0537-003	.0082 μF, Poly
C215	349X1032-109	.01 μF, 10%, 100V Mylar
C216, 218, 220, 238, 239	80X0099-076	1000 pF, 10%, 500V, Cer. Disc.
C217	349X1032-209	.01 μF, 10%, 200V, Mylar
C219	45X0524-052	150 μF, 10V, Electrolytic
C222	80X0099-137	680 pF, 10%, 500V, Cer. Disc.
C224	349X6822-109	.0068 μF, 10%, 100V, Mylar
C226, 227	80X0099-056	4700 μF, 10%, 500V, Cer. Disc.
C228	349X4732-109	.047 μF, 10%, 100V, Mylar
C229	349X1044-109	0.1 μF, 20%, 100V, Mylar
C230	45X0515-014	1.0 μF, 50V, Electrolytic
C231	349X1042-109	0.1 μF, 10%, 100V, Mylar
C232	45X0524-026	22 μF, 100V, Electrolytic
C233	349X4742-109	.47 μF, 10%, 100V, Mylar
C234	45X0524-025	250 μF, 100V, Electrolytic
C235	80X0099-006	470 pF, 10%, Z5F, Cer. Disc.
C236	349X2242-109	.22 μF, 10%, 100V, Mylar
C237	46X0540-001	.47 μF, 10%, 630V, Polyester Film

CONTROLS

R206, 256	40X0592-008	5k Ohm, Video Output, Size
R212	40X0585-093	2.5k Ohm, Reg. Adj.
R257, 263	40X0592-004	500k Ohm, Lin 1 & 2
R271	40X0585-094	2M Ohm, Focus

COILS & TRANSFORMERS

★L201	9A2788-001	Horiz. Osc.
★L202	9A2789-001	Horiz. Lin.
★T201	52X0126-001	Horiz. Driver

RESISTORS

R201	340X3102-954	1k Ohm, 20%, 1/2W
R202	340X3563-944	56k Ohm, 10%, 1/2W
R203, 237, 240	340X3471-944	470 Ohm, 10%, 1/2W
★R204	340X4152-843	1.5k Ohm, 10%, 1.0W
R205, 223, 260	340X3332-944	3.3k Ohm, 10%, 1/2W
R207	340X3472-944	4.7k Ohm, 10%, 1/2W
★R208	340X7752-733	7.5k Ohm, 5%, 4.0W
R209	340X3121-944	120 Ohm, 10%, 1/2W
R210	340X3560-944	56 Ohm, 10%, 1/2W
R211, 242, 259	340X3432-934	4300 Ohm, 5%, 1/2W
R213	43X0467-001	Thermistor
R214, 255	340X3512-934	5.1k Ohm, 5%, 1/2W
R215	340X3153-944	15k Ohm, 10%, 1/2W
★R216	340X4154-843	150k Ohm, 10%, 1.0W
R217	340X3335-944	3.3M Ohm, 10%, 1/2W
R218, 231	340X3221-944	220 Ohm, 10%, 1/2W
R219	340X3222-934	2.2k Ohm, 5%, 1/2W

★ Product Safety Device

RESISTORS (Cont'd.)

R220, 221	340X3184-944	180k Ohm, 10%, 1/2W
R222	340X3473-944	47k Ohm, 10%, 1/2W
R224	340X3104-944	100k Ohm, 10%, 1/2W
R225	340X3682-944	6.8k Ohm, 10%, 1/2W
R226	340X3391-944	390 Ohm, 10%, 1/2W
R227	340X3102-944	1k Ohm, 10%, 1/2W
R228	340X3102-934	1k Ohm, 5%, 1/2W
R229	340X3820-944	82 Ohm, 10%, 1/2W
★R230	340X4102-843	1k Ohm, 10%, 1.0W
R232	340X3152-934	1.5k Ohm, 5%, 1/2W
★R233	340X6152-743	1.5k Ohm, 10%, 3.0W
R234	340X5022-333	2.2 Ohm, 5%, 2.0W
R235	340X3151-944	150 Ohm, 10%, 1/2W
R236	340X3101-944	100 Ohm, 10%, 1/2W
R238, 241	340X3223-944	22k Ohm, 10%, 1/2W
R239	340X3182-944	1.8k Ohm, 10%, 1/2W
R243	340X3151-934	150 Ohm, 5%, 1/2W
R244	340X3680-934	68 Ohm, 5%, 1/2W
R245, 266	340X3330-934	33 Ohm, 5%, 1/2W
R246	340X3273-944	27k Ohm, 10%, 1/2W
R247, 248	340X3153-934	15k Ohm, 5%, 1/2W
R249, 275	340X3103-944	10k Ohm, 10%, 1/2W
R250	340X3822-944	8.2k Ohm, 10%, 1/2W
R251	340X3684-944	680k Ohm, 10%, 1/2W
R252	340X3564-944	560k Ohm, 10%, 1/2W
R253, 276	340X3274-944	270k Ohm, 10%, 1/2W
R254	340X3562-944	5.6k Ohm, 10%, 1/2W
R258	340X3224-944	220k Ohm, 10%, 1/2W
★R261	340X5150-843	15 Ohm, 10%, 2.0W
R262, 264	340X3824-934	820K Ohm, 5%, 1/2W
R265	340X3185-944	1.8M Ohm, 10%, 1/2W
R267, 268	340X3010-934	1 Ohm, 5%, 1/2W
R269	340X4392-843	3.9K Ohm, 10%, 1/2W
R270	340X3471-934	470 Ohm, 5%, 1/2W
R272	340X3475-944	4.7M Ohm, 10%, 1/2W
R273	340X3155-944	1.5M Ohm, 10%, 1/2W
★R274	340X4473-843	47k Ohm, 10%, 1.0W
R277	340X3033-934	3.3 Ohm, 5%, 1/2W

SEMICONDUCTORS

D201, 202, 203, 204, 207, 208	66X0046-001	Diode, Silicon FDH444
D205A, 205B	66X0066-001	Diode, Dual, MSD6102
D206	66X0054-002	Diode, RCA D2102SF
Q201, 205, 206	86X0113-001	Transistor (NPN) 2N3904
Q202, 208	86X0114-001	Transistor (PNP) 2N3906
Q203	86X0071-001	Transistor (NPN)
Q204, 212	86X0071-001	Transistor (NPN) MPSA06
Q207, 211	86X0058-002	Transistor (NPN) MPSA20
Q209	86X0116-001	Transistor Horiz, Driver (NPN) 2N6557
Q210	86X0066-001	Transistor (PNP) MPSA70
Q213	86X0072-001	Transistor (PNP) MPSA56
Q214	86X0073-001	Transistor (NPN) MPSU07
Q215	86X0074-001	Transistor (NPN) 2N5192
Q216	86X0075-001	Transistor (PNP) 2N5195
Q217	86X0070-001	Transistor (P.U.T.) MPU131
ZD201	66X0040-004	Diode, Zener 31V

MISCELLANEOUS

38A5395-000	Pix Socket & Connector Assy.

NOTES

This space is provided for personal notes